	VAR.	DIMENSION	POLE HEIGHT 45' POLE		70' POLE		85' POLE		100' POLE	
TENON PLATE	A	DIAMETER	-		1'-6½"		1'-6½"		1'-6½"	
	B	THICKNESS	-		⅜"		⅜"		⅜"	
	C	BOLT CIRCLE	-		1'-1½"		1'-1½"		1'-1½"	
	D	BOLT HOLE DIA.	-		⅞"		⅞"		⅞"	
	E	BOLT GROUP SEPARATION ANGLE	-		56.25°		56.25°		56.25°	
POLE TOP PLATE	F	DIAMETER	-		1'-5½"		1'-5½"		1'-5½"	
	G	THICKNESS	-		1"		1"		1"	
	H	BOLT CIRCLE	-		1'-1½"		1'-1½"		1'-1½"	
	I	SLOT WIDTH	-		13/16"		13/16"		13/16"	
	J	SLOT LENGTH	-		1⅞"		1⅞"		1⅞"	
	K	NUMBER OF SLOTS	-		16		16		16	
TUBE	L	SECTION	UPPER	LOWER	UPPER	LOWER	UPPER	LOWER	UPPER	LOWER
	M	TOP DIAMETER	-	-	10"	-	10"	-	10"	-
	N	BASE DIAMETER	-	-	-	2'-0"	-	2'-8"	-	2'-8"
	O	LENGTH	-	-	42'-0"	-	47'-0"	-	52'-6"	-
	P	HEIGHT TO BOTTOM OF SPLICE	-	-	-	28'-0"	-	38'-0"	-	47'-6"
	Q	THICKNESS	-	-	3/16"	¼"	3/16"	¼"	3/16"	¼"
	R	SPLICE LENGTH	SEE SPECIAL PROVISION "CAMERA LOWERING DEVICE ASSEMBLY-TYPE B"							
BASE PLATE	S	FLAT-TO-FLAT WIDTH	-		3'-0"		3'-8"		3'-8"	
	T	THICKNESS	-		1½"		1½"		1½"	
	U	ANCHOR ROD CIRCLE	-		2'-6"		3'-2"		3'-2"	
	V	ANCHOR ROD HOLE	-		1 13/16"		1 13/16"		1 13/16"	
	W	ANCHOR ROD DIAMETER	-		1½"		1½"		1½"	
TRAFFIC CONTROL FOUNDATION - SPAN POLE			-		TYPE C		TYPE D		TYPE D	

STEEL POLE DESIGN CRITERIA

MINIMUM DESIGN LIFE = 50 YEARS

LOADS:

DESIGN WIND PRESSURE:

DESIGN WIND SPEED = 120 MPH (3-SECOND GUST WIND SPEED)

GOVERNING GROUP LOAD COMBINATION: DL + WIND

ALL POLES WERE DESIGNED FOR WIND PRESSURE ASSUMING THE POLE TOP WAS 100' ABOVE THE GROUND TO ACCOUNT FOR POLES PLACED ON ELEVATED LOCATIONS.

WIND DIRECTION: PERPENDICULAR TO THE LOWERING DEVICE ASSEMBLY ARM

FATIGUE:

CATEGORY 1, IMPORTANCE FACTOR = 1.0

LOADING: NATURAL WIND GUSTS (VORTEX SHEDDING NOT CONSIDERED FOR POLE WITH TAPER RATE EXCEEDING 0.14" / FT)

FATIGUE THRESHOLD: DETAIL CATEGORY E' (2.6 KSI) (BASED ON ASSUMBED FILLET WELDED SOCKET CONNECTION OF POLE TO BASE PLATE

DESIGN METHOD:

ALLOWABLE STRESS DESIGN

DEFLECTION:

DEFLECTIONS ARE BASED ON A 3-SECOND GUST WIND SPEED OF 40 MPH. THIS APPROXIMATES A 30 MPH WIND WITH 30% GUSTS.

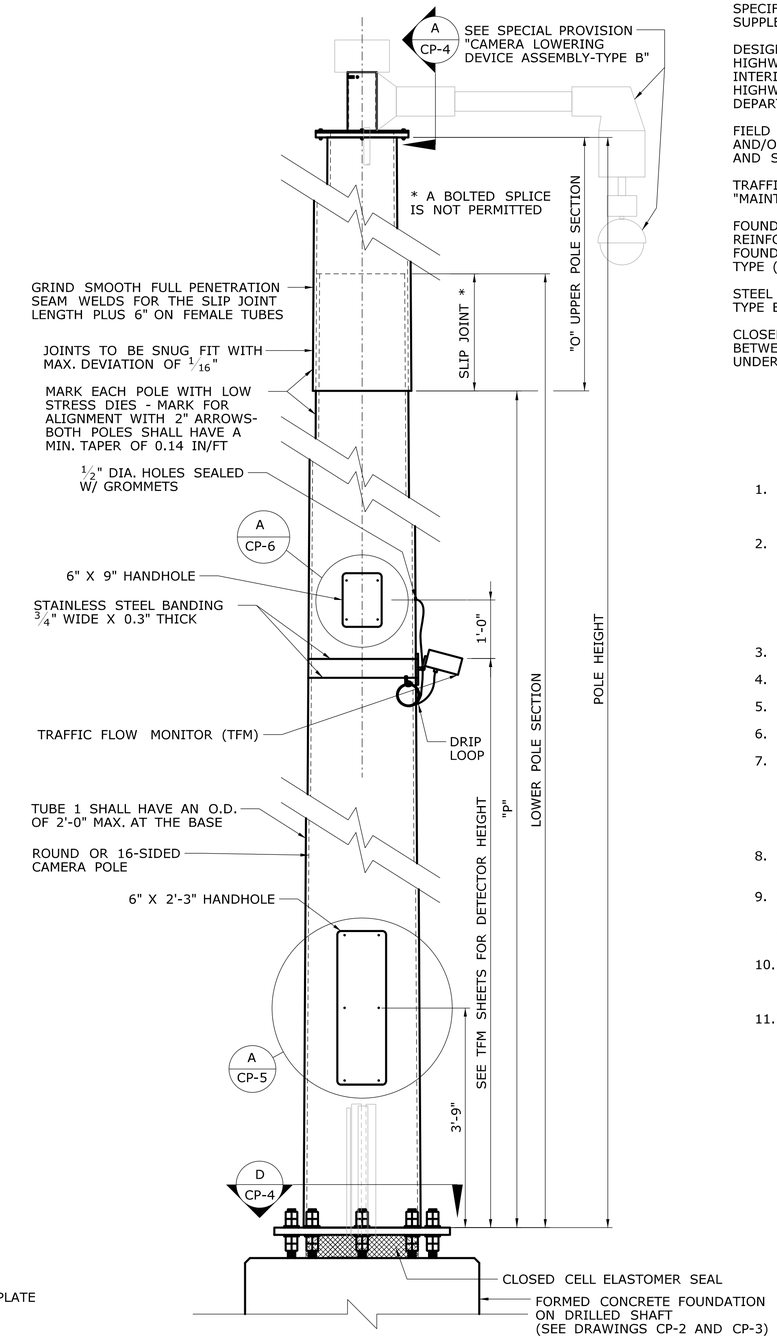

ELEVATION - CAMERA POLE

SCALE: 3/4" = 1'-0"

GENERAL NOTES

SPECIFICATIONS: CONNECTICUT DEPARTMENT OF TRANSPORTATION FORM 816, (2004), SUPPLEMENTAL SPECIFICATIONS DATED JULY, 2007 AND SPECIAL PROVISIONS.

DESIGN SPECIFICATIONS: STANDARD SPECIFICATIONS FOR STRUCTURAL SUPPORTS FOR HIGHWAY SIGNS LUMINAIRES AND TRAFFIC SIGNALS, 4TH EDITION (AASHTO - 2001) WITH INTERIM SPECIFICATIONS UP TO AND INCLUDING 2006, AND STANDARD SPECIFICATIONS FOR HIGHWAY BRIDGES, 17TH EDITION, AASHTO -2002, AS SUPPLEMENTED BY THE CONNECTICUT DEPARTMENT OF TRANSPORTATIONS BRIDGE DESIGN MANUAL (2003).

FIELD CONDITIONS: IF ANY FIELD CONDITIONS PRECLUDE COMPLIANCE WITH THE DRAWINGS AND/OR CONDITIONS SPECIFIED, THE CONTRACTOR SHALL IMMEDIATELY NOTIFY THE ENGINEER AND SHALL NOT PROCEED WITH ANY AFFECTED WORK.

TRAFFIC: ALL WORK SHALL BE PREFORMED ACCORDING TO THE SPECIAL PROVISIONS "MAINTENANCE AND PROTECTION OF TRAFFIC" AND "PROSECUTION AND PROGRESS."

FOUNDATION DETAILS: FOR FOUNDATIONS DETAILS, INCLUDING ANCHOR RODS, ANCHOR PLATE, REINFORCING AND ELECTRICAL CONDUIT AND GROUNDING DETAILS, SEE TRAFFIC CONTROL FOUNDATION SHEET AND SPECIAL PROVISION, "TRAFFIC CONTROL FOUNDATION - SPAN POLE-TYPE (C OR D)."

STEEL POLE AND BASE PLATE: SEE SPECIAL PROVISION, "CAMERA LOWERING DEVICE ASSEMBLY - TYPE B."

CLOSED CELL ELASTOMER SEAL: A SEALING RING SHALL BE FURNISHED AND INSTALLED BETWEEN THE FOUNDATION AND THE BASE PLATE. THE COST WILL BE INCLUDED IN THE PRICE UNDER THE ITEM, "CAMERA LOWERING DEVICE ASSEMBLY - TYPE B."

STRUCTURAL STEEL NOTES

1. ALL STRUCTURAL STEEL SHALL HAVE A MINIMUM YIELD STRENGTH OF 36 KSI. CHARPY V-NOTCH TOUGHNESS SAMPLING IS REQUIRED FOR THE POLE AND BASE PLATE; SEE THE SPECIAL PROVISION, "CAMERA LOWERING DEVICE ASSEMBLY - TYPE B."
2. ALL STEEL COMPONENTS OF THE CAMERA SUPPORT SHALL BE HOT-DIP GALVANIZED AFTER FABRICATIONS AND SHALL MEET THE REQUIREMENTS OF ASTM A123, OR A153, CLASS C, WHICHEVER SHALL APPLY, EXCEPT ASTM A325 TYPE-1 BOLTS MAY BE MECHANICALLY GALVANIZED AND SHALL MEET THE REQUIREMENTS OF ASTM B695 CLASS 50. STAINLESS STEEL BOLTS SHALL NOT BE GALVANIZED. ZINC-RICH FIELD PRIMER FOR TOUCH UP SHALL CONFORM TO THE REQUIREMENTS OF FEDERAL SPECIFICATION TT-P-641 TYPE 1 AND ASTM A780. THE USE OF AEROSOL SPRAY CANS SHALL NOT BE PREMITTED.
3. ALL HOLES FOR BOLTED CONNECTIONS SHALL BE STANDARD HOLES EXCEPT AS NOTED.
4. HIGH STRENGTH BOLTS SHALL CONFORM TO ASTM A325 TYPE 1.
5. STAINLESS STEEL BOLTS SHALL CONFORM TO ASTM A193, SERIES 300.
6. BOLTED FIELD SPLICES WILL NOT BE ALLOWED.
7. WELDING DETAILS, PROCEDURES AND TESTING METHODS SHALL CONFORM TO AWS D1.1 "STRUCTURAL WELDING CODE-STEEL." POLE AND BASE PLATE COMPONENTS ARE CONSIDERED FRACTURE CRITICAL AND SHALL BE FABRICATED IN ACCORDANCE WITH CHAPTER 12 (FRACTURE CONTROL PLAN) OF ANSI/AASHTO/AWS D1.5 BRIDGE WELDING CODE. MEMBERS SHALL BE DESIGNATED FRACTURE CRITICAL ON THE FABRICATION DRAWINGS.
8. UNLESS NOTED OTHERWISE, ALL GROOVE WELDS SHALL BE COMPLETE JOINT PENETRATION AND SHALL BE COMPLETELY INSPECTED BY ULTRASONIC TESTING.
9. ALL FILLET WELDS SHALL BE INSPECTED IN THEIR ENTIRETY BY MAGNETIC PARTICLE METHODS. WHERE MULTIPLE PASS WELDS ARE MADE, EACH PASS SHALL BE INSPECTED AND ACCEPTED BEFORE PROCEEDING TO THE NEXT PASS OR LAYER, AS DETERMINED BY THE ENGINEER.
10. THE STEEL POLE SHALL BE INSTALLED PLUMB. THE PERMISSIBLE VARIATIONS FOR LENGTH, DIAMETER, WALL THICKNESS AND STRAIGHTNESS OF THE TAPERED TUBE SHALL BE AS SPECIFIED IN ASTM A595.
11. THE STRUCTURAL STEEL FABRICATOR SHALL BE CERTIFIED UNDER AISC QUALITY CONTROL PROGRAM SBrF - SIMPLE STEEL BRIDGES - FRACTURE CRITICAL ENDORSEMENT.

LIST OF DRAWINGS

THE CAMERA POLE AND FOUNDATION ARE DETAILED IN U.S. CUSTOMARY UNITS. NO METRIC CONVERSION IS REQUIRED FOR METRIC PROJECTS FOR THE ITEMS, "CAMERA LOWERING DEVICE ASSEMBLY - TYPE B" AND "TRAFFIC CONTROL FOUNDATION - SPAN POLE TYPE (C OF D)" , WHICH ARE PAID FOR AS EACH.

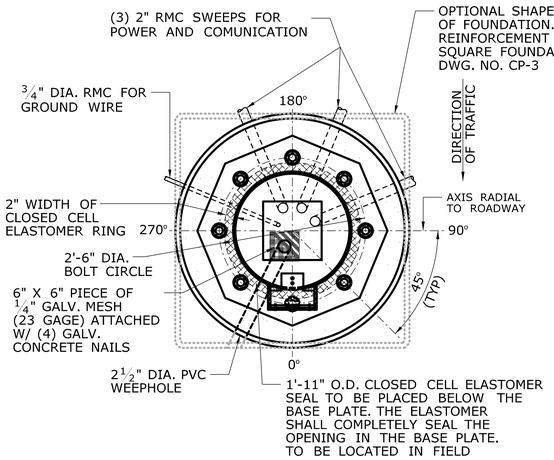

SECTION - POLE AND BASE PLATE (A / CP-2)

SCALE: 3/4" = 1'-0"

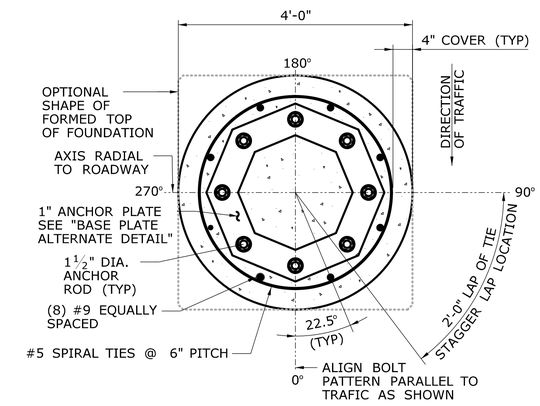

SECTION - FOUNDATION, ANCHOR PLATE AND REINFORCING (B / CP-2)

SCALE: 3/4" = 1'-0"

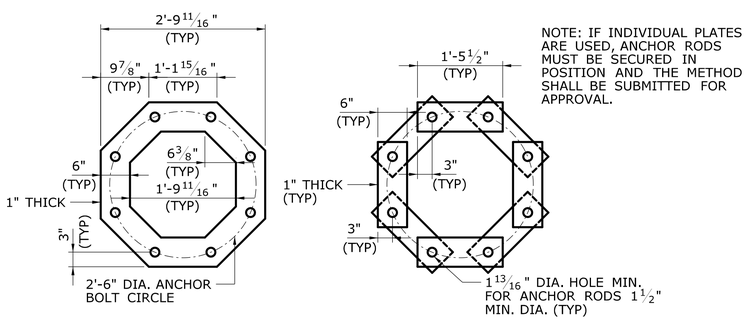

NOTE: IF INDIVIDUAL PLATES ARE USED, ANCHOR RODS MUST BE SECURED IN POSITION AND THE METHOD SHALL BE SUBMITTED FOR APPROVAL.

ANCHOR PLATE ALTERNATE DETAIL

SCALE: 3/4" = 1'-0"

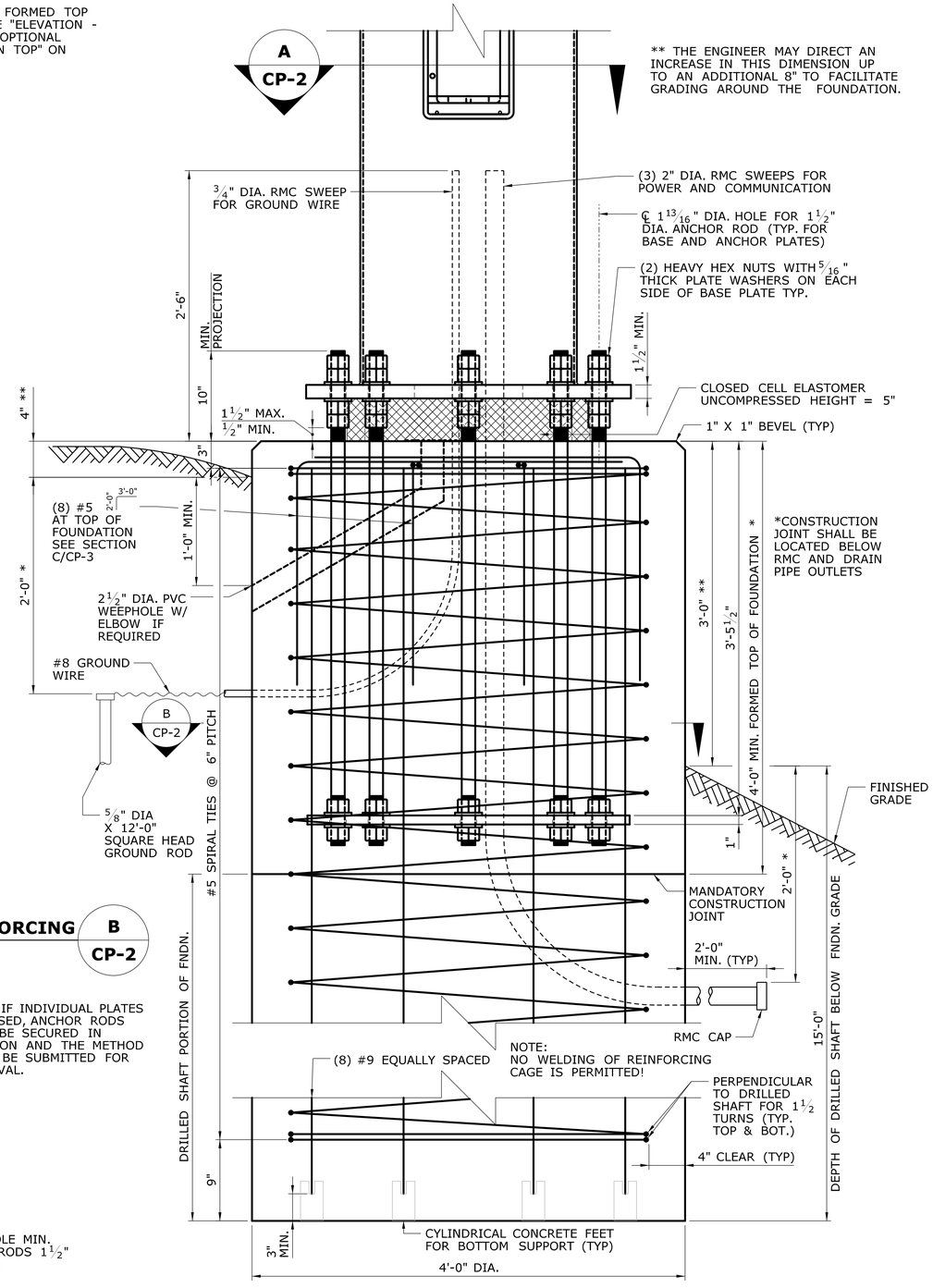

ELEVATION - TRAFFIC CONTROL FOUNDATION TYPE C

SCALE : 1 1/2" = 1'

FOUNDATION NOTES

FOUNDATIONS SHALL BE PAID FOR AS "TRAFFIC CONTROL FOUNDATION - SPAN POLE - TYPE C" OR "TRAFFIC CONTROL FOUNDATION - SPAN POLE - TYPE D."

FOUNDATION TYPE SHALL BE DETERMINED BY THE CAMERA POLE HEIGHT AS NOTED IN THE TABLE ON DRAWING NO. CP-1.

CLASS "F" CONCRETE SHALL BE USED FOR THE FORMED PORTION OF THE FOUNDATION AND SHALL ACHIEVE A 28 DAY COMPRESSIVE STRENGTH OF 4000 PSI.

CLASS "F" CONCRETE SHALL BE MODIFIED FOR THE DRILLED SHAFT PORTION IN ACCORDANCE WITH THE SPECIAL PROVISION, "TRAFFIC CONTROL FOUNDATION - SPAN POLE (TYPE)." CONCRETE SHALL ACHIEVE A 28 DAY COMPRESSIVE STRENGTH OF 4000 PSI.

REINFORCEMENT: ALL REINFORCEMENT SHALL CONFORM TO ASTM A615, GRADE 60.

LONGITUDINAL BARS SHALL BE CONTINUOUS FOR THE FULL HEIGHT OF THE DRILLED SHAFT. THE BARS SHALL NOT BE SPLICED.

WELDING OF REINFORCMENT IS NOT PREMITTED.

SPIRAL REINFORCEMENT SHALL BE SPLICED WITH A 2' LAP LENGTH BETWEEN INDIVIDUAL SPRIALS.

SPIRAL REINFORCMENT IS PREFFERED, BUT CIRCULAR TIES MAY BE SUBSTITUTED, IF EACH TIE HAS A 2' LAP LENGTH. LAP LOCATIONS SHALL BE ALTERNATED IN 90° INCREMENTS BETWEEN ADJACENT TIES SO LAPS ARE NOT MADE AT A SINGLE LOCATION AROUND THE PERIMETER OF THE DRILLED SHAFT.

SPIRALS SHALL NOT TERMINATE ON AN INCLINED PLANE TO THE SHAFT. THE BAR SHALL BE PERPENDICULAR TO THE DRILLED SHAFT AT THE TOP AND BOTTOM FOR A MINIMUM OF 1 1/2 TURNS BEFORE TERMINATING.

ANCHOR RODS SHALL CONFORM TO ASTM F1554, GRADE 105. NUTS SHALL CONFORM TO ASTM A563, HEAVY HEX, GRADE DH. WASHERS SHALL CONFORM TO F436, TYPE 1.

ANCHOR RODS SHALL BE TESTED FOR CHARPY V-NOTCH IMPACT STRENGTH IN ACCORDANCE WITH THE SPECIAL PROVISION, "TRAFFIC CONTROL FOUNDATION - SPAN POLE (TYPE)."

ANCHOR RODS, NUTS, AND WASHERS SHALL BE HOT-DIP GALVANIZED IN ACCORDANCE WITH ASTM A 153, CLASS C.

ANCHOR PLATE SHALL CONFORM TO AASHTO M270, GRADE 50.

ANCHOR PLATES SHALL BE HOT-DIP GALVANIZED IN ACCORDANCE WITH ASTM A123.

REV.	DATE	REVISION DESCRIPTION	SHEET NO.

THE INFORMATION, INCLUDING ESTIMATED QUANTITIES OF WORK, SHOWN ON THESE SHEETS IS BASED ON LIMITED INVESTIGATIONS BY THE STATE AND IS IN NO WAY WARRANTED TO INDICATE THE CONDITIONS OF ACTUAL QUANTITIES OF WORK WHICH WILL BE REQUIRED.

Plotted Date: 3/16/2010

DESIGNER/DRAFTER: -

CHECKED BY: -

STATE OF CONNECTICUT
DEPARTMENT OF TRANSPORTATION

Filename: ...\Desktop\CAMERA POLE.dgn

SIGNATURE/ BLOCK:
OFFICE OF ENGINEERING

APPROVED BY: DATE:

PROJECT TITLE: -

TOWN: -

DRAWING TITLE:
CAMERA POLE FOUNDATION - TYPE C

PROJECT NO. -

DRAWING NO. CP-2

SHEET NO. S

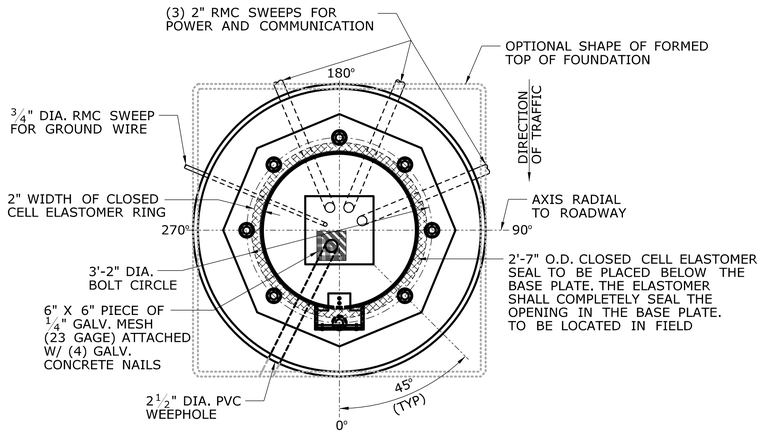

SECTION - POLE AND BASE PLATE (A / CP-3)

SCALE: 3/4" = 1'-0"

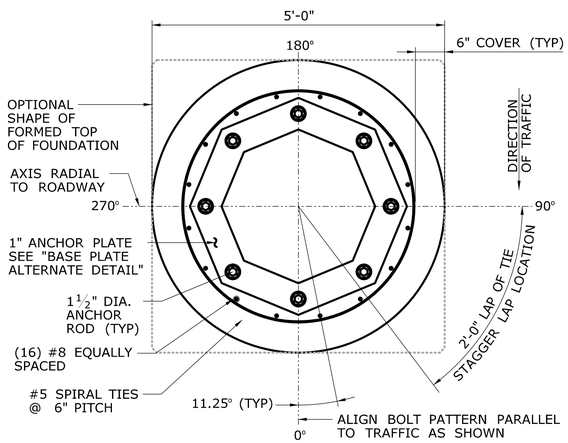

SECTION - FOUNDATION, ANCHOR PLATE AND REINFORCING (B / CP-3)

SCALE: 3/4" = 1'-0"

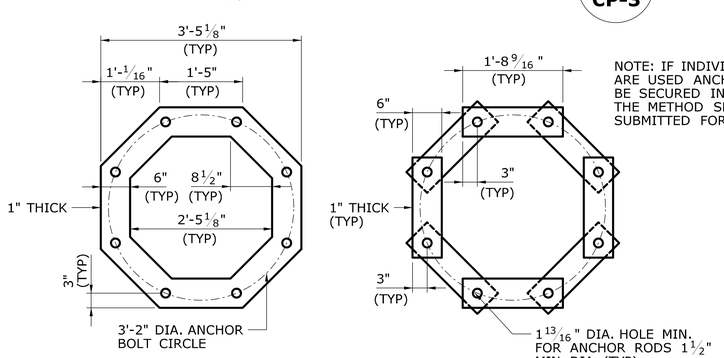

NOTE: IF INDIVIDUAL PLATES ARE USED ANCHOR RODS MUST BE SECURED IN POSITION AND THE METHOD SHALL BE SUBMITTED FOR APPROVAL.

ANCHOR PLATE ALTERNATE DETAIL

SCALE: 3/4" = 1'-0"

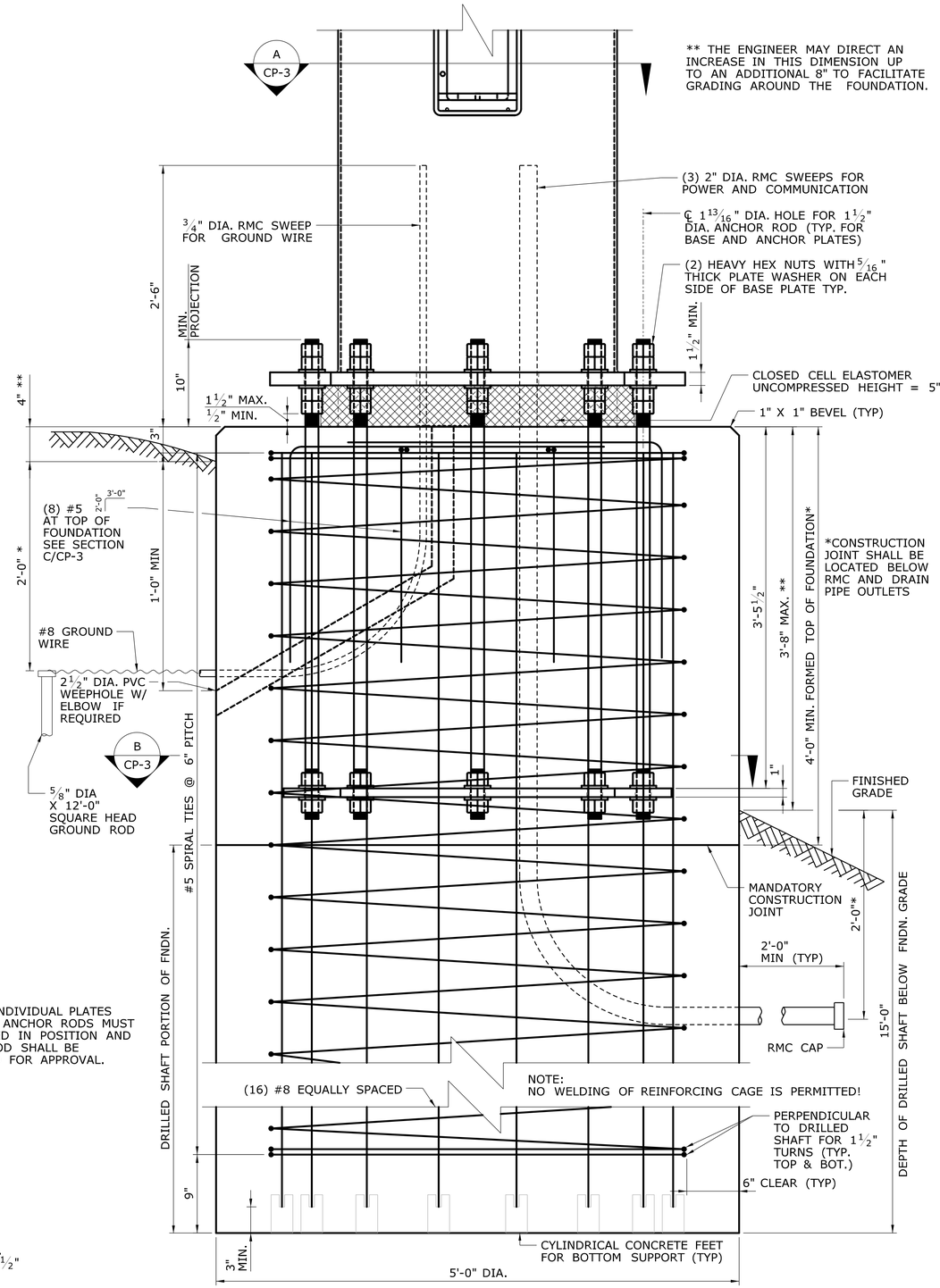

ELEVATION - TRAFFIC CONTROL FOUNDATION TYPE D

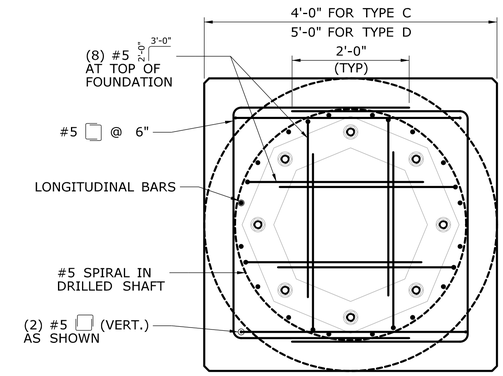

SECTION - REINFORCEMENT IN OPTIONAL SQUARE FOUNDATION TOP (C / CP-3)

SCALE: 3/4" = 1'-0"

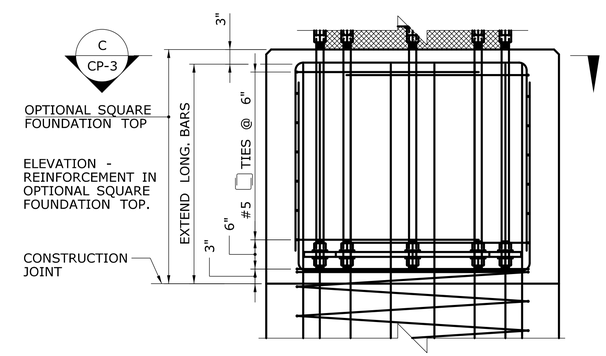

ELEVATION - REINFORCEMENT IN OPTIONAL SQUARE FOUNDATION TOP

SCALE: 3/4" = 1'-0"

REV.	DATE	REVISION DESCRIPTION	SHEET NO.

THE INFORMATION, INCLUDING ESTIMATED QUANTITIES OF WORK, SHOWN ON THESE SHEETS IS BASED ON LIMITED INVESTIGATIONS BY THE STATE AND IS IN NO WAY WARRANTED TO INDICATE THE CONDITIONS OF ACTUAL QUANTITIES OF WORK WHICH WILL BE REQUIRED.

Plotted Date: 3/16/2010

DESIGNER/DRAFTER: -

CHECKED BY: -

STATE OF CONNECTICUT
DEPARTMENT OF TRANSPORTATION

Filename: ..\Desktop\CAMERA POLE.dgn

SIGNATURE/ BLOCK:
OFFICE OF ENGINEERING

APPROVED BY: DATE:

PROJECT TITLE: -

TOWN: -

DRAWING TITLE: CAMERA POLE FOUNDATION - TYPE D

PROJECT NO. -

DRAWING NO. CP-3

SHEET NO. S

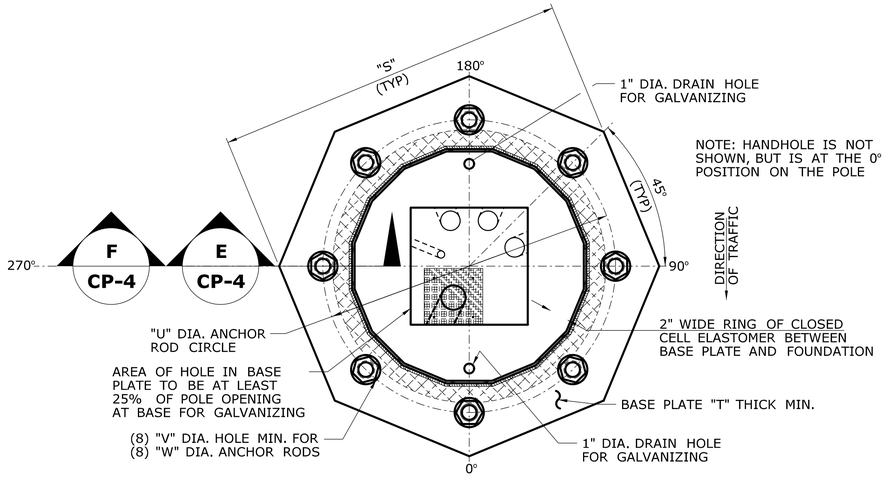

PLAN - MULTI-SIDED OR ROUND POLE BASE PLATE — D / CP-1

SCALE: 1½" = 1'-0"

BASE PLATE NOTES:

FILLET WELDS FOR SOCKET CONNECTIONS SHALL BE UNEQUAL LEG WELDS, WITH THE LONG LEG OF THE FILLET WELD ALONG THE POLE. THE TERMINATION OF THE LONGER WELD LEG SHOULD CONTACT THE SHAFT'S SURFACE AT APPROXIMATELY A 30° ANGLE.

CONNECTION OF POLE TO BASE PLATE:
(FILLET WELDED SOCKET CONNECTION OR FULL PENETRATION GROOVE WELD WITH A CONTINUOUSLY WELDED BACKER BAR.)

THE FOLLOWING CRITERIA SHALL BE ADDRESSED:

1. THE FABRICATOR SHALL CUT INSIDE THE SPECIFIED OPENING IN THE BASE PLATE AND GRIND TO MATCH THE OUTSIDE DIMENSION OF THE POLE.
2. THE SEPERATION BETWEEN THE BASE PLATE AND THE POLE WITHIN THE SOCKET SHALL NOT EXCEED 1/16" (2MM) IN ORDER TO ASSURE SUFFICIENT FILLET WELD AS SPECIFIED IN AWS D1.1, SECTION 5.22, "TOLERANCE OF JOINT DIMENSIONS."

NOTES:

1. FULL PENETRATION GROOVE WELDS SHALL BE INSPECTED AS SPECIFIED IN ANNEX K OF AWS D1.1 - STRUCTURAL STEEL WELDING CODE - STEEL. IF A 5/16" WALL THICKNESS IS USED, THE PROVISIONS OF ANNEX K DO NOT APPLY.
2. MULTI-SIDED POLES MAY BE SUBSTITUTED FOR ROUND, PROVIDED THEY HAVE AT LEAST 16 SIDES.
3. THE CONTRACTOR IS RESPONSIBLE FOR THE DESIGN AND DETAILING OF THE TENON AND TENON PLATE. DIMENSIONS SHOWN ARE FOR MINIMUM STRENGTH COMPARISION. COORDINATE THE TENON DESIGN WITH THE MANUFACTURER OF THE LOWERING DEVICE FOR COMPATABILITY.

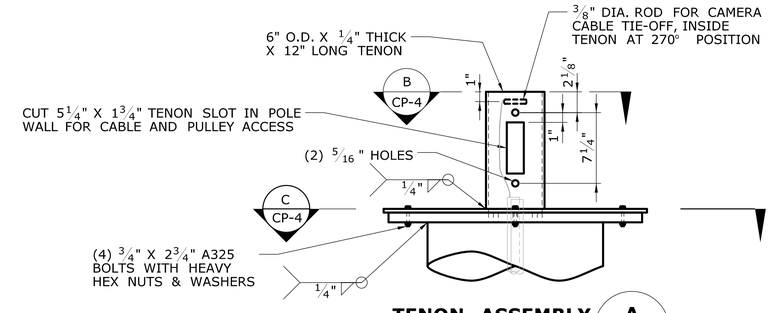

TENON ASSEMBLY — A / CP-1

SCALE: 1½" = 1'-0"

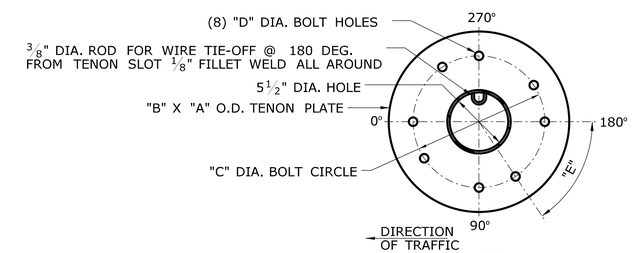

TENON PLATE — B / CP-4

SCALE: 1½" = 1'-0"

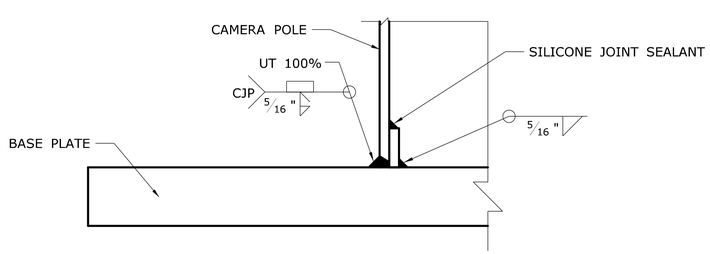

FULL PENETRATION GROOVE WELD — E / CP-4

SCALE: 6" = 1'-0"

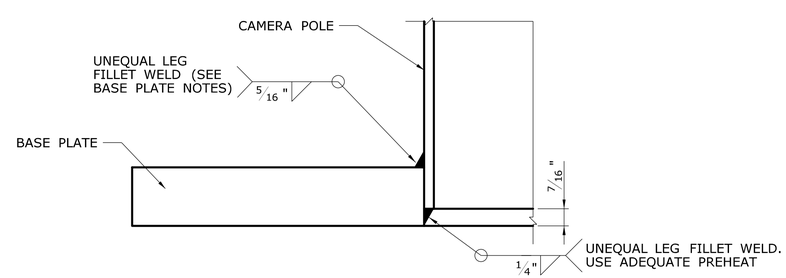

FILLET WELDED SOCKET CONNECTION — F / CP-4

SCALE: 6" = 1'-0"

SECTION - WELDED POLE - TO - BASE PLATE CONNECTION

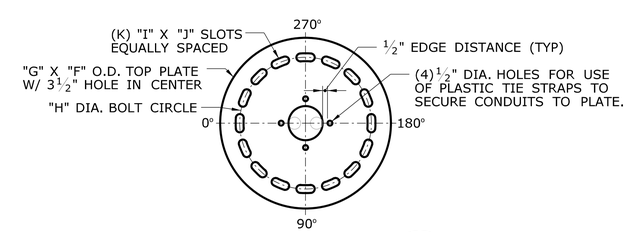

POLE TOP PLATE — C / CP-4

SCALE: 1½" = 1'-0"

FOR VARIABLE DIMENSIONS SEE TABLE ON DRAWING NUMBER CP-1

REV.	DATE	REVISION DESCRIPTION	SHEET NO.

THE INFORMATION, INCLUDING ESTIMATED QUANTITIES OF WORK, SHOWN ON THESE SHEETS IS BASED ON LIMITED INVESTIGATIONS BY THE STATE AND IS IN NO WAY WARRANTED TO INDICATE THE CONDITIONS OF ACTUAL QUANTITIES OF WORK WHICH WILL BE REQUIRED.

Plotted Date: 3/16/2010

DESIGNER/DRAFTER: -
CHECKED BY: -

STATE OF CONNECTICUT
DEPARTMENT OF TRANSPORTATION

Filename: ...\Desktop\CAMERA POLE.dgn

SIGNATURE/ BLOCK:
OFFICE OF ENGINEERING
APPROVED BY: DATE:

PROJECT TITLE: -

TOWN: -

DRAWING TITLE: CAMERA POLE DETAILS

PROJECT NO. -
DRAWING NO. CP-4
SHEET NO. S

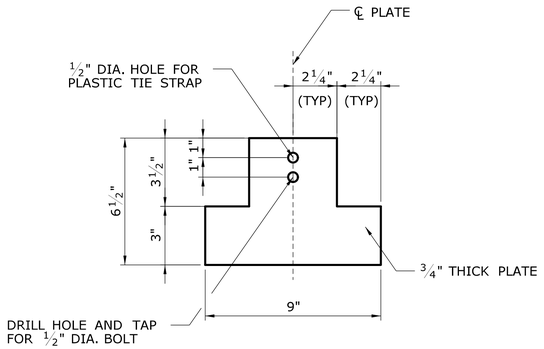

WINCH PLATE DETAIL

SCALE: 3" = 1'

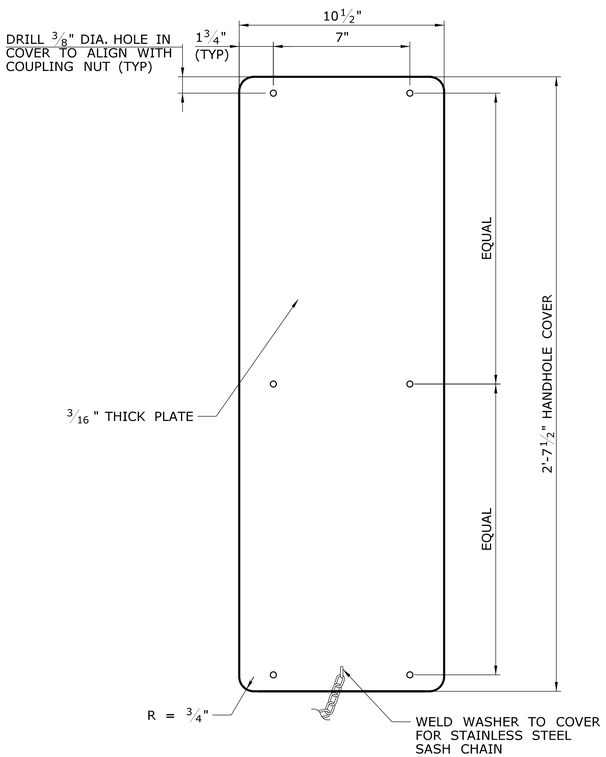

HANDHOLE COVER

SCALE: 3" = 1'

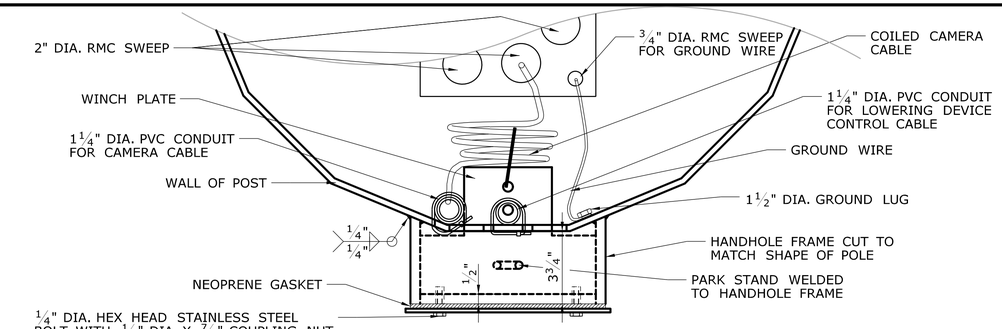

PLAN SECTION - HANDHOLE FRAME

B / CP-5

SCALE: 3" = 1'

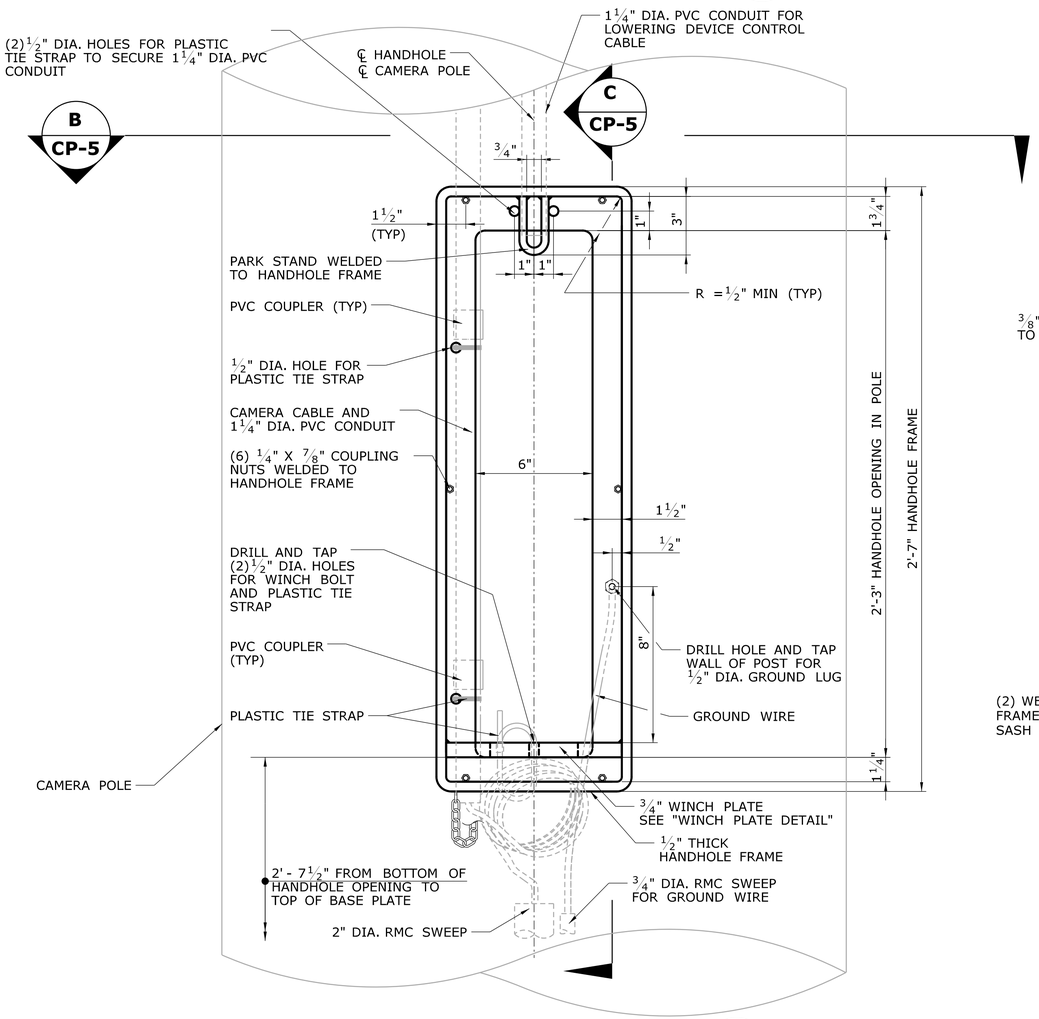

ELEVATION - HANDHOLE OPENING (COVER NOT SHOWN)

A / CP-1

SCALE: 3" = 1'

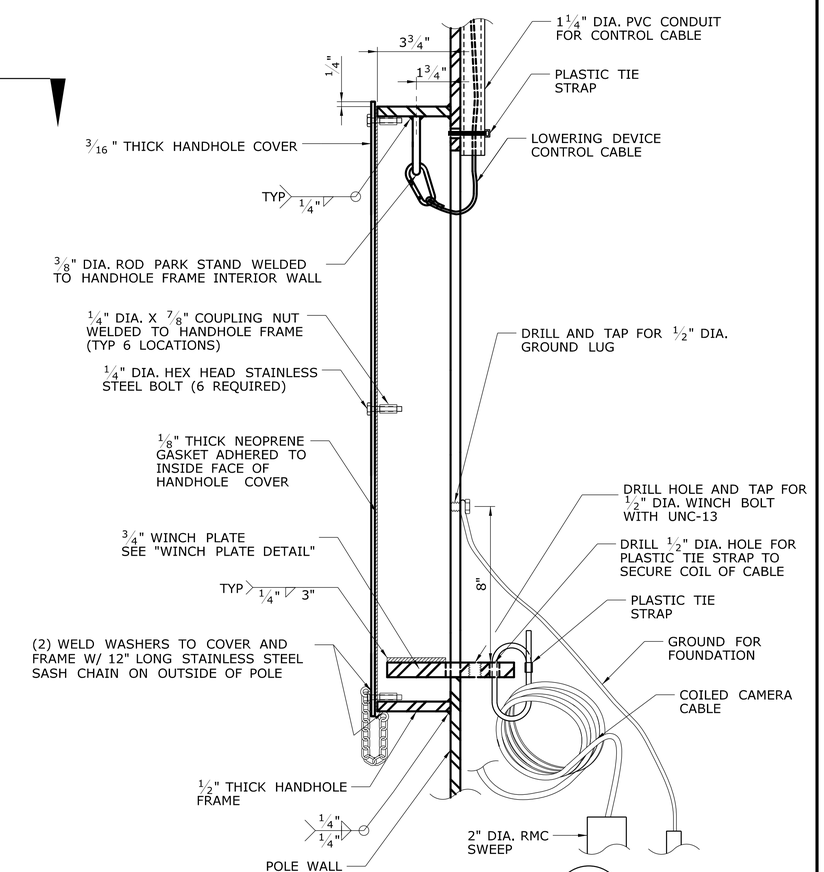

SECTION - HANDHOLE

C / CP-5

SCALE: 3" = 1'

REV.	DATE	REVISION DESCRIPTION	SHEET NO.

THE INFORMATION, INCLUDING ESTIMATED QUANTITIES OF WORK, SHOWN ON THESE SHEETS IS BASED ON LIMITED INVESTIGATIONS BY THE STATE AND IS IN NO WAY WARRANTED TO INDICATE THE CONDITIONS OF ACTUAL QUANTITIES OF WORK WHICH WILL BE REQUIRED.

Plotted Date: 3/16/2010

DESIGNER/DRAFTER: -

CHECKED BY: -

SCALE AS NOTED

STATE OF CONNECTICUT
DEPARTMENT OF TRANSPORTATION

Filename: ...\Desktop\CAMERA POLE.dgn

SIGNATURE/BLOCK:
OFFICE OF ENGINEERING

APPROVED BY: DATE:

PROJECT TITLE: -

TOWN: -

DRAWING TITLE: 6" X 2' -3" HANDHOLE DETAILS

PROJECT NO. -

DRAWING NO. CP-5

SHEET NO. S

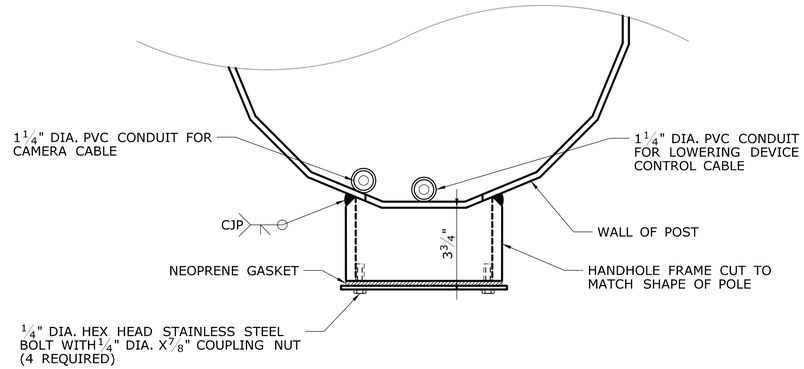

PLAN SECTION - HANDHOLE FRAME (B / CP-6)

SCALE: 3" = 1'

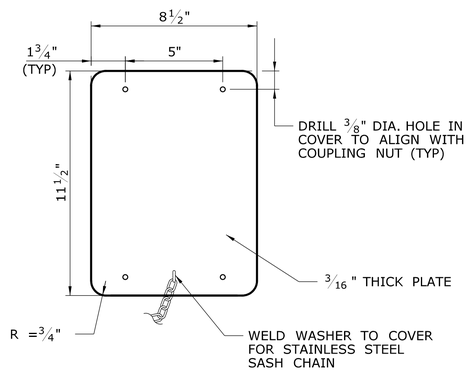

HANDHOLE COVER

SCALE: 3" = 1'

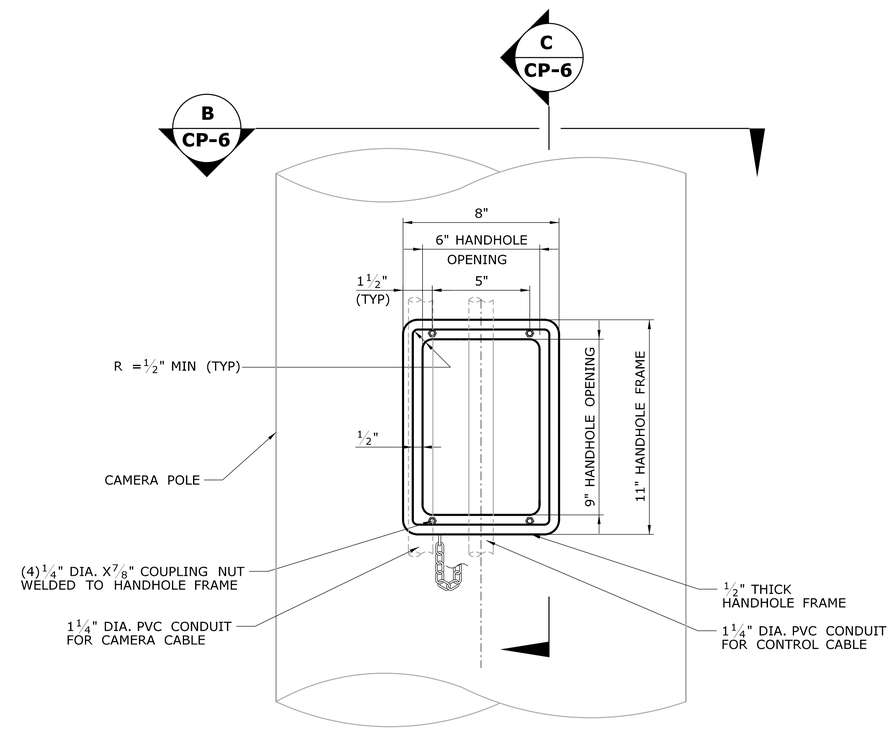

ELEVATION - HANDHOLE OPENING (A / CP-1)

SCALE: 3" = 1'

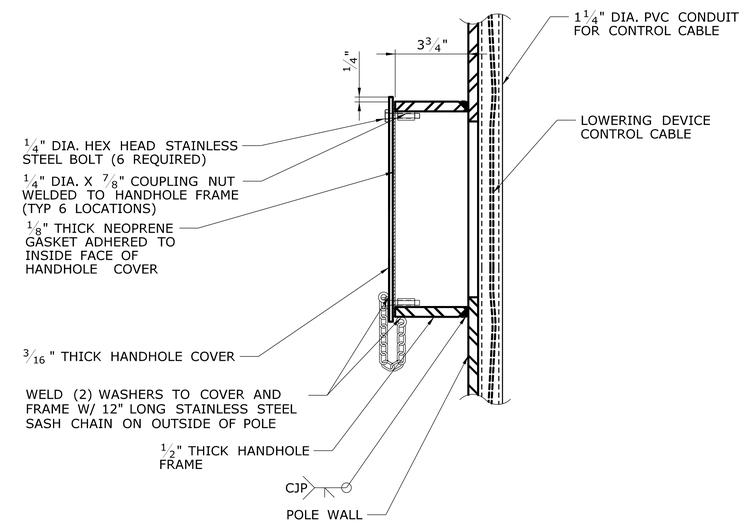

SECTION - HANDHOLE (C / CP-6)

SCALE: 3" = 1'

REV.	DATE	REVISION DESCRIPTION	SHEET NO.

THE INFORMATION, INCLUDING ESTIMATED QUANTITIES OF WORK, SHOWN ON THESE SHEETS IS BASED ON LIMITED INVESTIGATIONS BY THE STATE AND IS IN NO WAY WARRANTED TO INDICATE THE CONDITIONS OF ACTUAL QUANTITIES OF WORK WHICH WILL BE REQUIRED.

Plotted Date: 3/16/2010

DESIGNER/DRAFTER: -

CHECKED BY: -

STATE OF CONNECTICUT
DEPARTMENT OF TRANSPORTATION

Filename: ...\Desktop\CAMERA POLE.dgn

SIGNATURE/ BLOCK:

OFFICE OF ENGINEERING

APPROVED BY: DATE:

PROJECT TITLE: -

TOWN: -

DRAWING TITLE: 6" X 9" HANDHOLE DETAILS

PROJECT NO. -

DRAWING NO. CP-6

SHEET NO. S

SUGGESTED POLE INSTALLATION SEQUENCE

1. THE CONTRACTOR SHALL MOBILIZE AN ADEQUATE WORKSPACE TO ASSEMBLE AND RAISE THE CAMERA POLE. THE CAMERA POLE SHALL BE INSTALLED IN ACCORDANCE WITH THE SPECIAL PROVISIONS "MAINTENANCE AND PROTECTION OF TRAFFIC " AND "PROSECUTION AND PROGRESS".

2. TO ASSEMBLE THE CAMERA POLE, LAY THE POLE SECTIONS ACROSS A MINIMUM OF TWO WOOD BLOCKS PER SECTION AS SHOWN ON THE PLANS, AND PULL SECTIONS TOGETHER USING A COME-ALONG. (THE HANDHOLE SHALL BE ORIENTATED TOWARD THE SKY)

3. SECURE THE CAMERA CABLE AND LOWERING DEVICE CONTROL CABLE PVC CONDUITS INSIDE THE POLE USING THE PLASTIC TIE STRAPS AS SHOWN ON THE PLANS. FEED THE CAMERA CABLE AND LOWERING DEVICE CONTROL CABLE INTO THEIR RESPECTIVE PVC CONDUITS.

4. ATTACH THE TENON PLATE AND TENON, THEN THE ARM AND JUNCTION BOX IN THE REQUIRED ORIENTATION.

5. CONNECT THE CAMERA CABLE WIRES TO THE WIRES GOING TO THE LOWERING DEVICE.

6. A GUIDE WIRE SHALL BE ATTACHED TO THE LOWERING DEVICE CONTROL CABLE AT THE END OF THE ARM TO PROVIDE EXTRA CONTROL DURING LIFTING AND PLACING.

7. BRACE THE BOTTOM OF THE POLE TO PREVENT SLIDING OF THE POLE DURING LIFTING.

8. PLACE TWO SLINGS AROUND THE POLE FOR LIFTING. ONE SLING SHALL BE PLACED TWO FEET BELOW THE SPLICE LOCATION AND THE OTHER SHALL BE PLACED BELOW THE HANDHOLE. A LIFTING CABLE SHALL CONNECT THE TWO SLINGS AS SHOWN ON THE PLANS.

9. LIFT THE ASSEMBLED CAMERA POLE ABOVE THE FOUNDATION, ROTATE TO DESIRED ORIENTATION AND CONNECT TO ANCHOR RODS. SEE THE SPECIAL PROVISION FOR THE CAMERA POLE FOR ANCHOR ROD TIGHTENING PROCEDURE.

10. NEXT LOWER THE LOWERING DEVICE CONTROL CABLE USING THE WINCH, AND DISCONNECT THE GUIDE WIRE. ATTACH THE CAMERA AND RAISE USING THE WINCH.

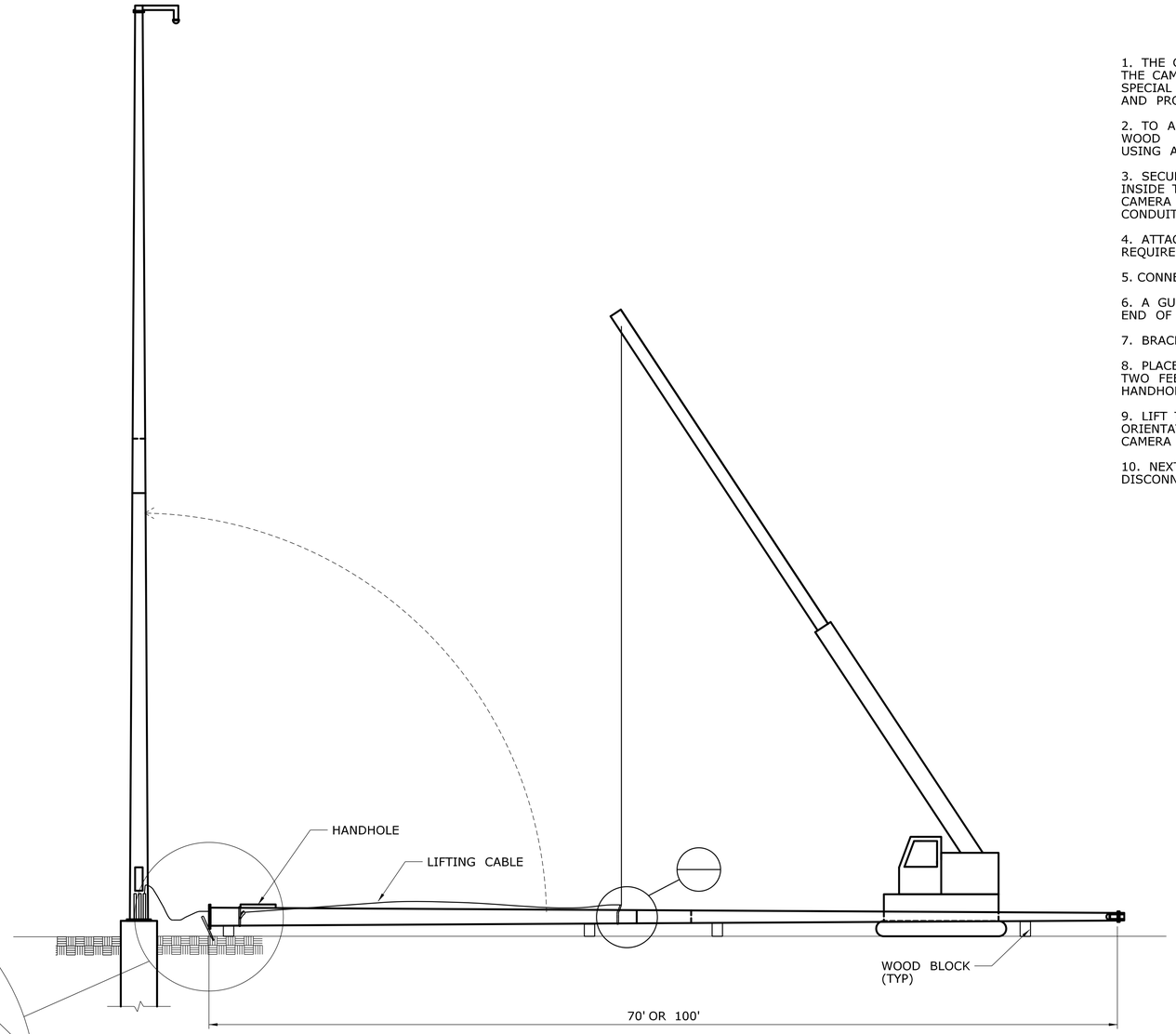

CONSTRUCTION DETAIL

SCALE: 1/8" = 1'

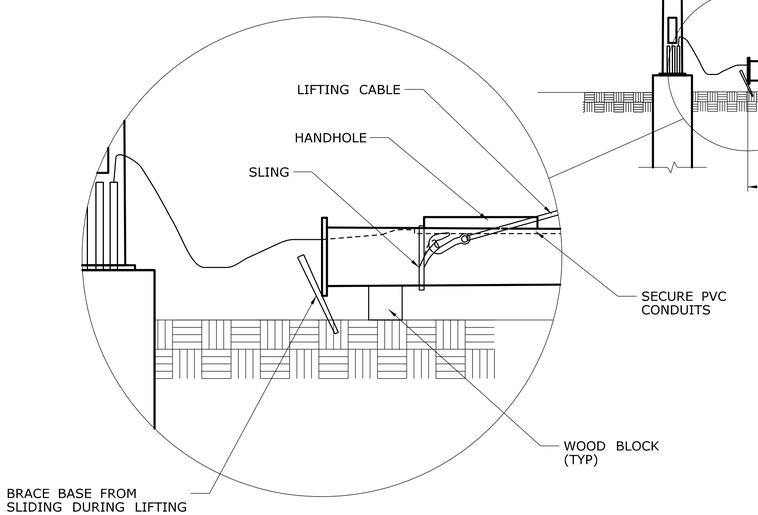

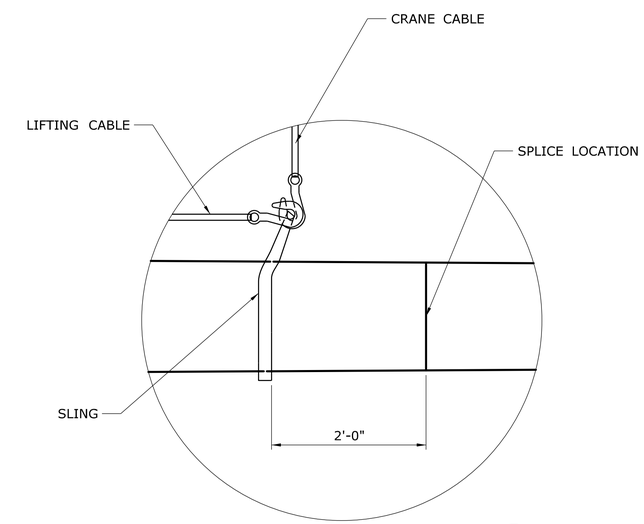

SLING LOCATION AT SPLICE

SCALE: 1" = 1'

REV.	DATE	REVISION DESCRIPTION	SHEET NO.

THE INFORMATION, INCLUDING ESTIMATED QUANTITIES OF WORK, SHOWN ON THESE SHEETS IS BASED ON LIMITED INVESTIGATIONS BY THE STATE AND IS IN NO WAY WARRANTED TO INDICATE THE CONDITIONS OF ACTUAL QUANTITIES OF WORK WHICH WILL BE REQUIRED.

Plotted Date: 3/16/2010

DESIGNER/DRAFTER: -

CHECKED BY: -

STATE OF CONNECTICUT
DEPARTMENT OF TRANSPORTATION

Filename: ...\Desktop\CAMERA POLE.dgn

SIGNATURE/ BLOCK:

OFFICE OF ENGINEERING

APPROVED BY: DATE:

PROJECT TITLE: -

TOWN: -

DRAWING TITLE: SUGGESTED CAMERA POLE INSTALLATION SEQUENCE

PROJECT NO. -

DRAWING NO. CP-7

SHEET NO. S