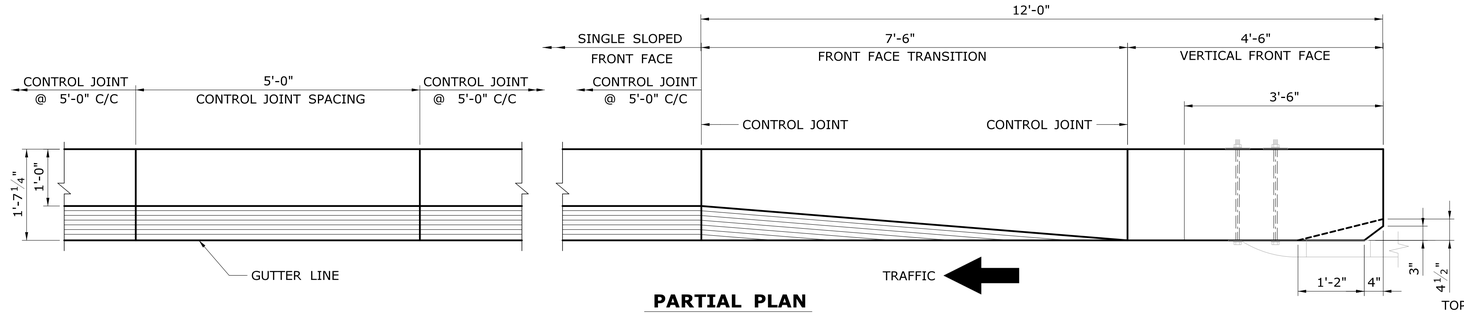

PARTIAL PLAN

SCALE: ¾" = 1'-0"

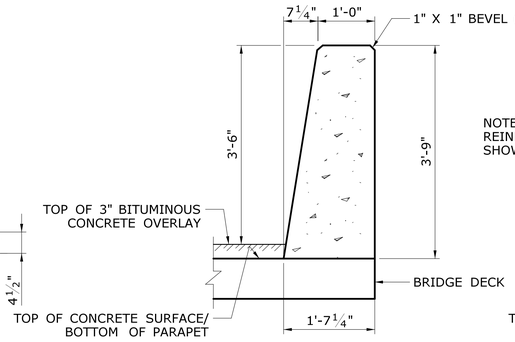

SECTION - SINGLE SLOPE PARAPET (A / -)

SCALE: ¾" = 1'-0"

NOTE:
REINFORCEMENT NOT SHOWN FOR CLARITY.

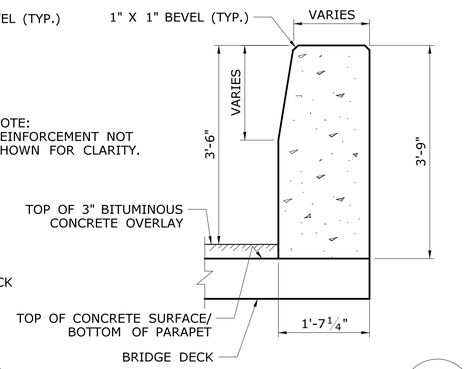

SECTION - PARAPET TRANSITION (B / -)

SCALE: ¾" = 1'-0"

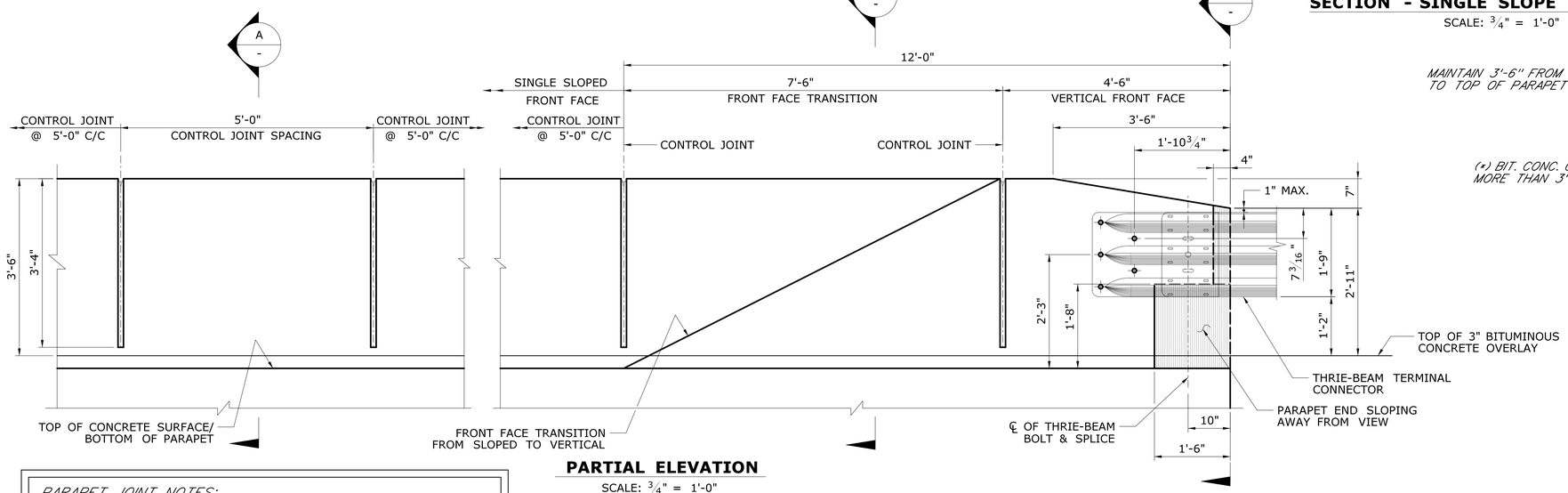

PARTIAL ELEVATION

SCALE: ¾" = 1'-0"

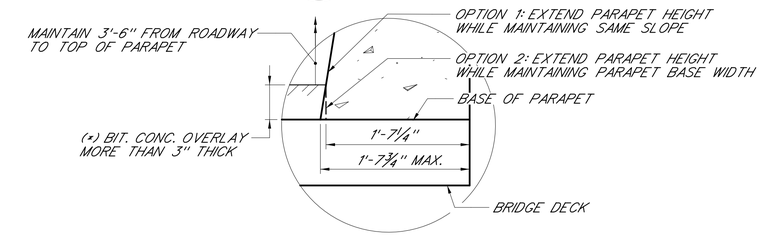

PARAPET MODIFICATION DETAIL FOR OVERLAY MORE THAN 3"

SCALE: N.T.S.

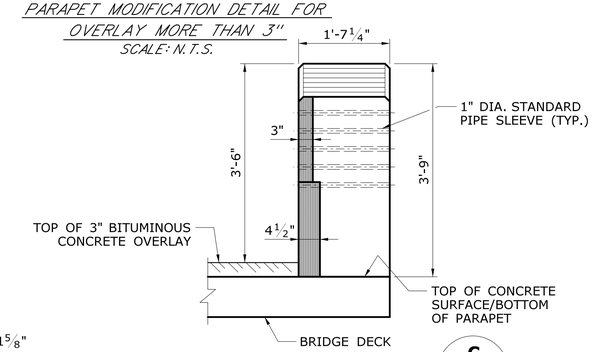

SECTION - END VIEW (C / -)

SCALE: ¾" = 1'-0"

PARAPET JOINT NOTES:

1. *ALL JOINT LOCATIONS SHALL BE SHOWN ON CONSTRUCTION PLANS.*
2. *CONTROL JOINT SPACING SHALL NOT EXCEED 5'-0" C/C.*
3. *DESIGNER SHALL INCLUDE JOINT DETAILS IN CONSTRUCTION PLANS.*

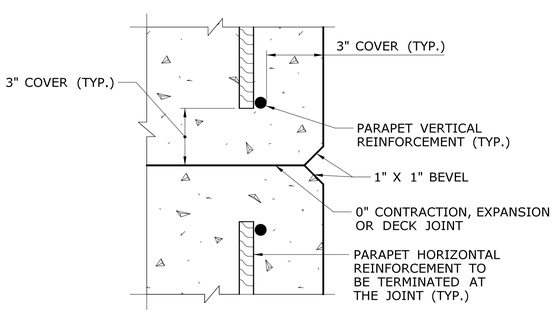

PLAN SECTION - PARAPET JOINT DETAIL

SCALE: N.T.S.

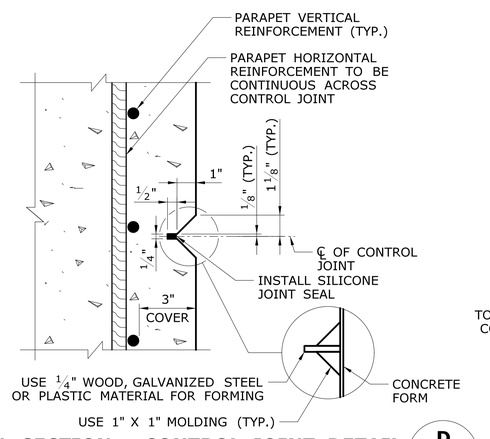

PLAN SECTION - CONTROL JOINT DETAIL (D / -)

SCALE: N.T.S.

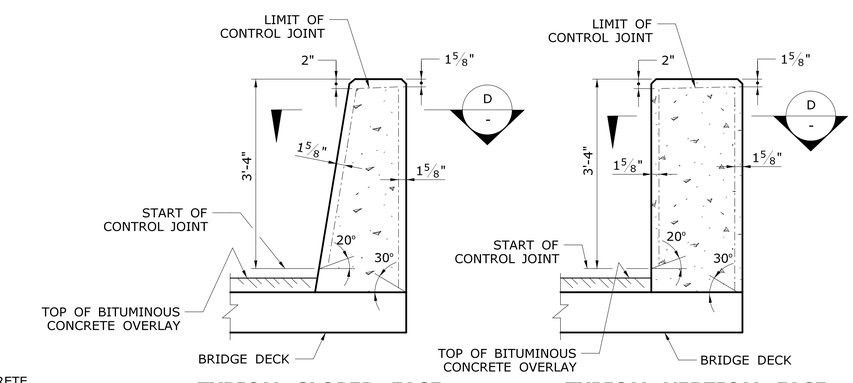

TYPICAL SLOPED FACE

TYPICAL VERTICAL FACE

SECTION - PARAPET CONTROL JOINT DETAIL

SCALE: ¾" = 1'-0"

GENERAL GUIDE SHEET NOTES:

THIS PARAPET HAS BEEN EVALUATED AT TEST LEVEL 4 (TL-4) AND DETERMINED THAT IT COMPLIES WITH MASH 2016.

ALL ITALICIZED TEXT ON THIS SHEET IS FOR INSTRUCTION PURPOSE ONLY AND SHALL NOT BE INCLUDED IN CONSTRUCTION PLANS.

DESIGNER SHALL REFER TO BRIDGE DESIGN MANUAL, SECTION 6 FOR CLASS OF CONCRETE AND REINFORCEMENT SELECTION. THE CLASS OF CONCRETE AND GRADE OF REINFORCEMENT SHALL BE SHOWN ON CONSTRUCTION PLANS.

3" BITUMINOUS CONCRETE OVERLAY IS CONSIDERED IN THIS GUIDE SHEET. DESIGNER SHALL FOLLOW THE INSTRUCTIONS INDICATED HEREIN TO MODIFY THE PARAPET GEOMETRY TO ACCOMMODATE OVERLAY THICKNESS MORE THAN 3".

DESIGNER SHALL SPECIFY ON CONSTRUCTION PLANS THAT PENETRATING SEALER PROTECTIVE COMPOUND SHALL BE APPLIED TO ALL EXPOSED FACES OF PARAPET. DESIGNER SHALL ALSO SPECIFY THAT SILICONE JOINT SEAL SHALL BE INSTALLED PRIOR TO APPLICATION OF PENETRATING SEALER PROTECTIVE COMPOUND.

REV.	DATE	REVISION DESCRIPTION	SHEET NO.

THE INFORMATION, INCLUDING ESTIMATED QUANTITIES OF WORK, SHOWN ON THESE SHEETS IS BASED ON LIMITED INVESTIGATIONS BY THE STATE AND IS IN NO WAY WARRANTED TO INDICATE THE CONDITIONS OF ACTUAL QUANTITIES OF WORK WHICH WILL BE REQUIRED.

Plotted Date: 12/31/2019

DESIGNER/DRAFTER: -

CHECKED BY: -

SCALE AS NOTED

STATE OF CONNECTICUT
DEPARTMENT OF TRANSPORTATION

Filename: ...\Single Slope Parapet - Details.dgn

SIGNATURE/ BLOCK:
OFFICE OF ENGINEERING
APPROVED BY:

PROJECT TITLE: - - -

TOWN: - -

DRAWING TITLE: SINGLE SLOPE PARAPET - DETAILS

PROJECT NO. -

DRAWING NO. -

SHEET NO. 1 OF 2

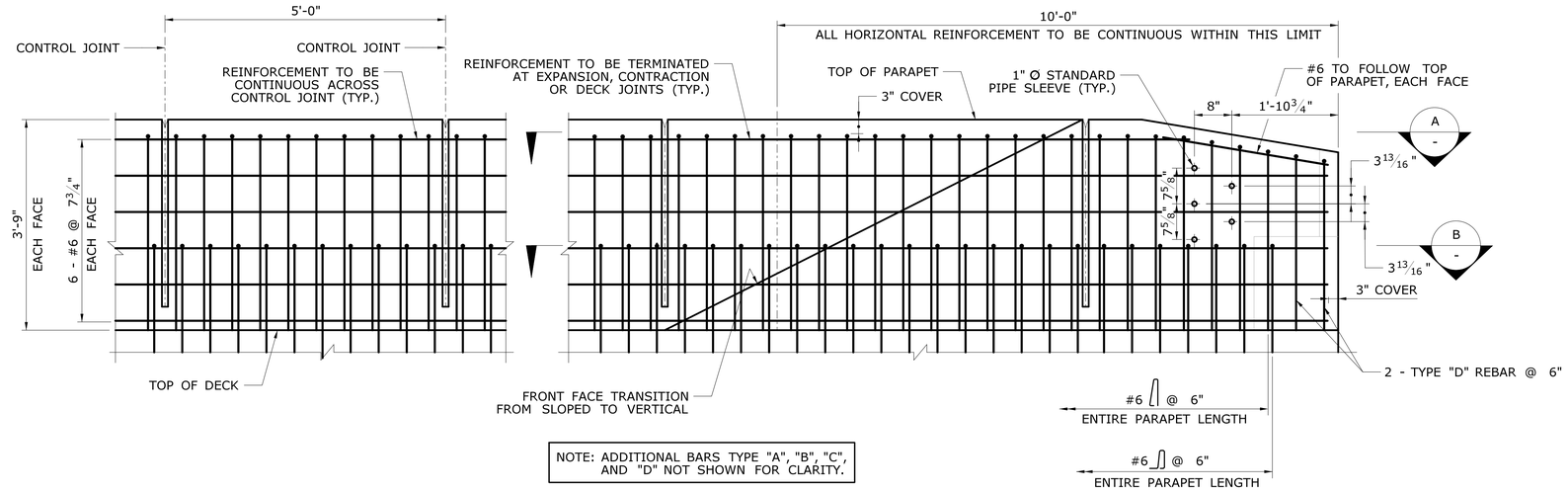

NOTE: ADDITIONAL BARS TYPE "A", "B", "C", AND "D" NOT SHOWN FOR CLARITY.

PARTIAL ELEVATION - TYPICAL REINFORCED CONCRETE PARAPET DETAILS

SCALE: 3/4" = 1'-0"

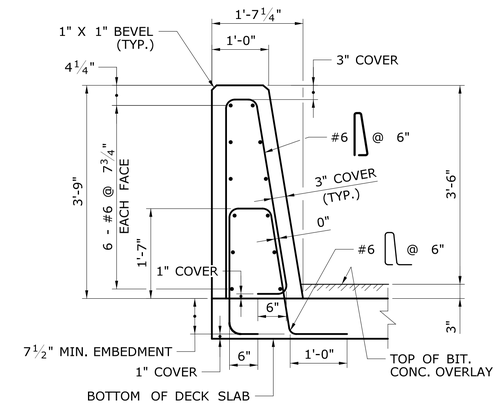

PARAPET ON DECK SLAB

SCALE: 3/4" = 1'-0"

REINFORCEMENT SPLICE NOTES:

1. THE SPLICE LENGTH FOR THE REINFORCEMENT IN THE PARAPETS SHALL BE AS FOLLOWS UNLESS DIMENSIONED OTHERWISE:

BAR SIZE	SPLICE LENGTH
#6	2'-6"

2. THE SPLICES SHALL BE ALTERNATED SO THAT 50% OR LESS OF THE LONGITUDINAL BARS ARE SPLICED AT THE SAME LOCATION.

DESIGNER SHALL ADJUST THE REINFORCEMENT DIMENSIONS SHOWN ON THIS SHEET WHILE MAINTAINING THE SAME REINFORCEMENT CONFIGURATION WHEN THE PARAPET GEOMETRY IS MODIFIED TO ACCOMMODATE MORE THAN 3" BITUMINOUS CONCRETE OVERLAY.

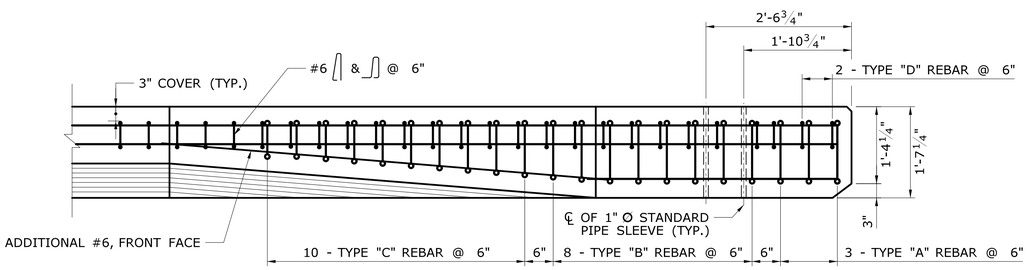

PLAN SECTION - VERTICAL TO SINGLE SLOPE TRANSITION A

SCALE: 3/4" = 1'-0"

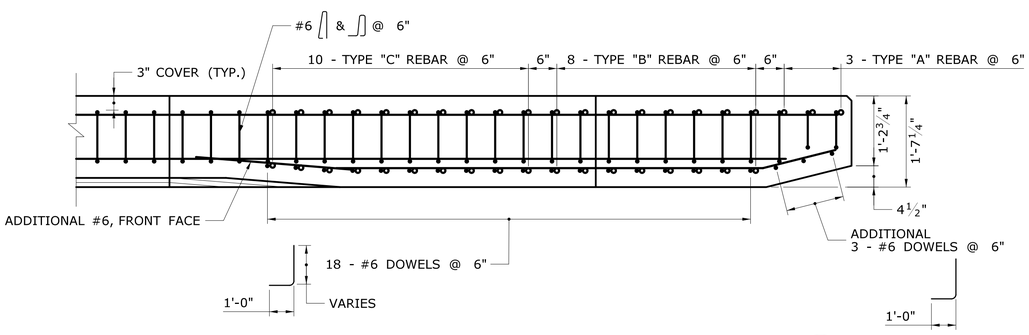

PLAN SECTION - VERTICAL TO SINGLE SLOPE TRANSITION B

SCALE: 3/4" = 1'-0"

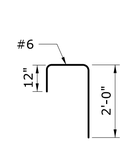

TYPE "A" REBAR

SCALE: N.T.S.

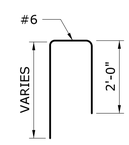

TYPE "B" REBAR

SCALE: N.T.S.

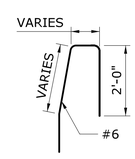

TYPE "C" REBAR

SCALE: N.T.S.

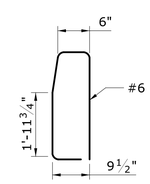

TYPE "D" REBAR

SCALE: N.T.S.

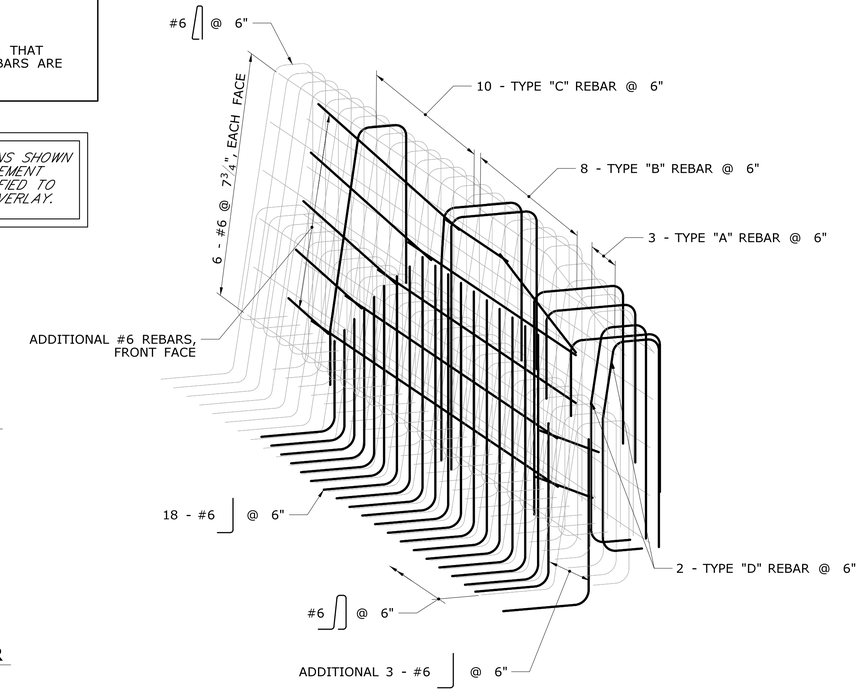

ISOMETRIC VIEW - REINFORCEMENT DETAIL AT PARAPET END AND TRANSITION

SCALE: N.T.S.

REV.	DATE	REVISION DESCRIPTION	SHEET NO.

THE INFORMATION, INCLUDING ESTIMATED QUANTITIES OF WORK, SHOWN ON THESE SHEETS IS BASED ON LIMITED INVESTIGATIONS BY THE STATE AND IS IN NO WAY WARRANTED TO INDICATE THE CONDITIONS OF ACTUAL QUANTITIES OF WORK WHICH WILL BE REQUIRED.

Plotted Date: 12/31/2019

DESIGNER/DRAFTER: -

CHECKED BY: -

SCALE AS NOTED

STATE OF CONNECTICUT
DEPARTMENT OF TRANSPORTATION

Filename: ...\Single Slope Parapet - Reinforcement.dgn

SIGNATURE/BLOCK:

OFFICE OF ENGINEERING

APPROVED BY:

PROJECT TITLE: - - -

TOWN: - -

DRAWING TITLE: SINGLE SLOPE PARAPET - REINFORCEMENT

PROJECT NO. -

DRAWING NO. -

SHEET NO. 2 OF 2